IRRIGATION SCHEDULE OR EQUIVILENT.

SYMBOL	MANUFACTURER/MODEL/DESCRIPTION
EST LCS RCS CST SST	Rain Bird 1806 15 Strip Series Turf Spray 6.0in. Pop-Up Sprinkler with Co-Molded Wiper Seal. Side and Bottom Inlet. 1/2in. NPT Female Threaded Inlet.
Q T H F	Rain Bird 1806 8 Series MPR Turf Spray 6.0in. Pop-Up Sprinkler with Co-Molded Wiper Seal. Side and Bottom Inlet. 1/2in. NPT Female Threaded Inlet.
Q T H F	Rain Bird 1806 10 Series MPR Turf Spray 6.0in. Pop-Up Sprinkler with Co-Molded Wiper Seal. Side and Bottom Inlet. 1/2in. NPT Female Threaded Inlet.
Q T H TQ F	Rain Bird 1806 12 Series MPR Turf Spray 6.0in. Pop-Up Sprinkler with Co-Molded Wiper Seal. Side and Bottom Inlet. 1/2in. NPT Female Threaded Inlet.
Q T H TQ F	Rain Bird 1806 15 Series MPR Turf Spray 6.0in. Pop-Up Sprinkler with Co-Molded Wiper Seal. Side and Bottom Inlet. 1/2in. NPT Female Threaded Inlet.
4 6 8 10 12 15 18	Rain Bird 1806 ADJ Turf Spray 6.0in. Pop-Up Sprinkler with Co-Molded Wiper Seal. Side and Bottom Inlet. 1/2in. NPT Female Threaded Inlet.
EST LCS RCS CST SST	Rain Bird 1812 15 Strip Series Shrub Spray 12in. Pop-Up Sprinkler with Co-Molded Wiper Seal. Side and Bottom Inlet. 1/2in. NPT Female Threaded Inlet.
Q T H F	Rain Bird 1812 8 Series MPR Shrub Spray 12in. Pop-Up Sprinkler with Co-Molded Wiper Seal. Side and Bottom Inlet. 1/2in. NPT Female Threaded Inlet.
Q T H F	Rain Bird 1812 10 Series MPR Shrub Spray 12in. Pop-Up Sprinkler with Co-Molded Wiper Seal. Side and Bottom Inlet. 1/2in. NPT Female Threaded Inlet.
Q T H TQ F	Rain Bird 1812 12 Series MPR Shrub Spray 12in. Pop-Up Sprinkler with Co-Molded Wiper Seal. Side and Bottom Inlet. 1/2in. NPT Female Threaded Inlet.
Q T H TQ F	Rain Bird 1812 15 Series MPR Shrub Spray 12in. Pop-Up Sprinkler with Co-Molded Wiper Seal. Side and Bottom Inlet. 1/2in. NPT Female Threaded Inlet.
4 6 8 10 12 15 18	Rain Bird 1812 ADJ Shrub Spray 12in. Pop-Up Sprinkler with Co-Molded Wiper Seal. Side and Bottom Inlet. 1/2in. NPT Female Threaded Inlet.
1401 1402 1404 1408	Rain Bird 1800-1400 Flood 1401 Fixed flow rate (0.25-2.0GPM), full circle bubbler, 1/2" FIPT.

SYMBOL	MANUFACTURER/MODEL/DESCRIPTION
	Rain Bird PEB 1", 1-1/2", 2" Plastic Industrial Valves. Low Flow Operating Capability, Globe Configuration.
BF	Febco 765 2" Pressure Vacuum Breaker, brass with ball valve SOV. Install 12" above highest downstream outlet and the highest point in the downstream piping.
C	Rain Bird ESP4ME3 4 Station, Hybrid Modular Outdoor Controller. For Residential or Light Commercial Use. LNK WiFi Module and Flow Sensor Ready.
RS	Rain Bird RSD-BEx Rain Sensor, with metal latching bracket, extension wire.
M	Water Meter 2" 2" Irrigation Meter
	Irrigation Lateral Line: PVC Schedule 40
	Irrigation Mainline: PVC Schedule 40
	Pipe Sleeve: PVC Schedule 40

Valve Callout
- # — Valve Number
- # — Valve Flow
- #" — Valve Size

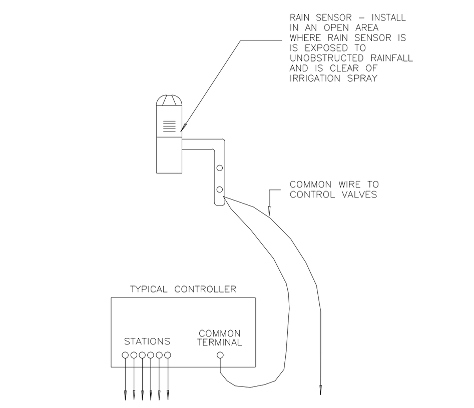

AUTOMATIC RAIN SENSOR

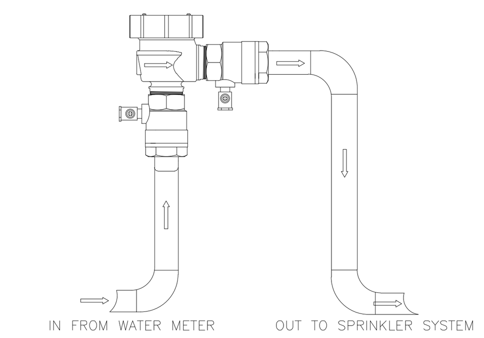

BACKFLOW PREVENTER

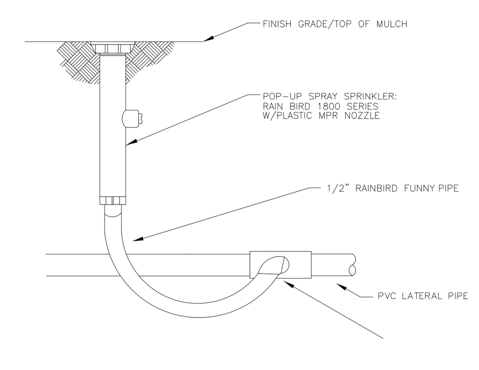

POP-UP SPRAY SPRINKLER

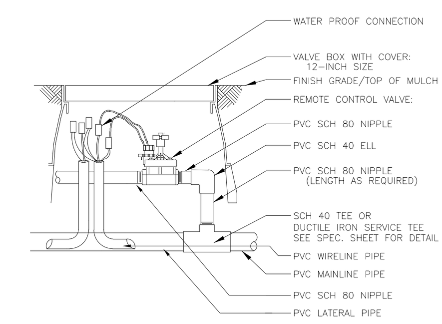

REMOTE CONTROL VALVE

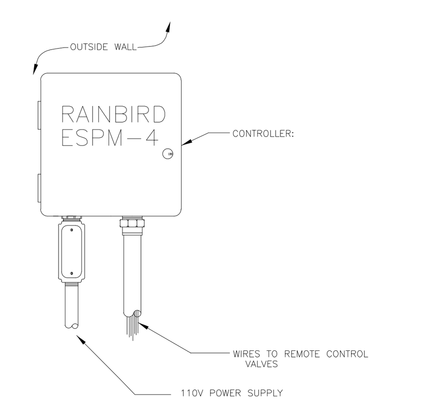

CONTROLLER

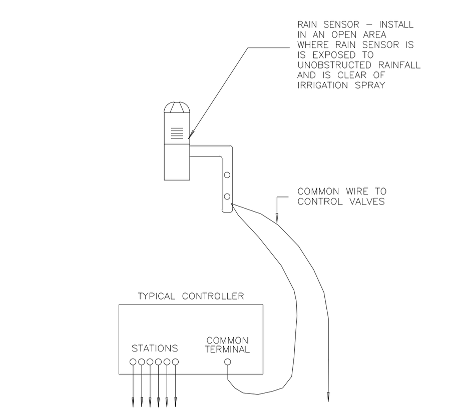

AUTOMATIC RAIN SENSOR

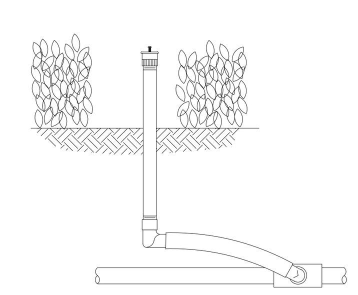

BUBBLER ON RISER

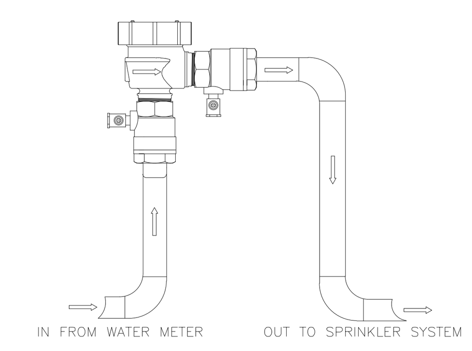

EXISTING BACKFLOW PREVENTER

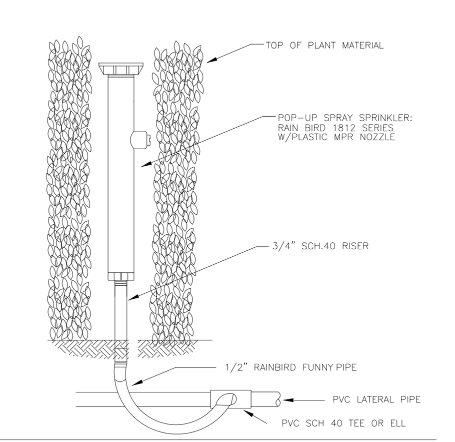

POP-UP SPRAY SPRINKLER ON RISER

GENERAL NOTES

1. Pipe sizes shall conform to those shown on the drawings. No substitutions of smaller pipe sizes shall be permitted, but substitutions of larger sizes may be approved. All damaged and rejected pipe shall be removed from the site at the time of said rejection.
2. All mainline, lateral line and control wire conduit under paving shall be installed in separate sleeves. Sleeves shall be a minimum of twice (2X) the diameter of the pipe to be sleeved. Main Line shall be installed in with lateral pipe where possible.
3. Install all backflow prevention devices and all piping between the point of connection and the backflow preventer as per local codes.
4. Final location of the backflow preventer and automatic controller shall be approved by the owner's authorized representative.
5. 120 VAC electrical power source at controller location shall be provided by others. The electrical contractor shall make the final connection from the electrical source to the controller.
6. All sprinkler heads shall be set perpendicular to finish grade unless otherwise specified.
7. The irrigation contractor shall flush and adjust all sprinkler heads and valves for optimum spray with minimal overspray onto walks, streets, walls, etc.
8. This design is diagramatic. All piping, valves, etc., shown within paved areas is for design clarification only and shall be installed in planting areas wherever possible. The contractor shall locate all valves in shrub areas where possible.
9. It is the responsibility of the irrigation contractor to familiarize himself with all grade differences, location of walls, retaining walls, structures and utilities. The irrigation contractor shall repair or replace all items damaged by his work. He shall coordinate his work with other contractors for the location and installation of pipe sleeves through walls, under roadways and paving, etc.
10. Do not willingly install the sprinkler system as shown on the drawings when it is obvious in the field that unknown obstructions, grade differences or differences in the area dimensions exist that might not have been considered in the engineering. such obstructions or differences should be brought to the attention of the owner's authorized representative. In the event this notification is not performed, the irrigation contractor shall assume full responsibility for any revisions necessary.
11. All sprinkler equipment not otherwise detailed or specified shall be installed as per manufacturer's recommendations and specifications.
12. The irrigation contractor shall install check valves on all heads in areas where finish grade exceeds 4:1, where post valve shut–off draining, of the irrigation head occurs or as directed by the owner's authorized representative.
13. The contractor shall provide 1800 PCS (pressure compensating screens) as necessary to reduce or eliminate overspray onto streets, walks or other areas as directed by the owner's authorized representative.
14. All control wires shall be installed in PVC conduit.
15. All remote control valves, gate valves, quick couplers, control wire and computer cable pull points shall be installed in approved valves boxes with covers.
16. The installation devices are to be guaranteed for the period of (1) year from the date of final acceptance.
17. A rust free, automatic underground irrigation system to be installed per plan in accordance with requirements of the Building Code, include a rain–sensing cutoff device, providing 100% coverage with 50% overlap, and reuse water wherever practicable and available.
18. Bubblers shall be provided for all new and relocated trees and palms.

AAC
PZ23-12000049
06/04/2024

CALL 48 HOURS BEFORE YOU DIG
IT'S THE LAW!
811
SUNSHINE STATE ONE CALL OF FLORIDA, INC.

SITE PLAN REVIEW SUBMITTAL

DULAND DESIGN
land planners landscape architects

SEAL:
Digitally signed by CHANG DU
DN: C=US, O=DULAND DESIGN LLC, dnQualifier=A01410C0000018C45A0AE82000CA073, cn=CHANG DU
Date: 2024.05.06 11:10:35 -04'00'

PROJECT:
RETAIL DEVELOPMENT
4791 N. FEDERAL HIGHWAY
POMPANO BEACH, FLORIDA

ALL DESIGNS AND DETAILS INDICATED OR REPRESENTED BY THIS DRAWING ARE FOR USE ON AND IN CONJUCTION WITH THE SPECIFIED PROJECT. THIS IS THE PROPERTY OF DULAND DESIGN LLC. AND SHALL NOT BE USED OR REPRODUCED IN WHOLE OR IN PART WITHOUT WRITTEN PERMISSION FROM A PRINCIPAL OF THE FIRM OR BE LIABLE FOR THE FULLEST LEGAL RECOURSE. THE CONTRACTOR SHALL VERIFY ALL EXISTING CONDITIONS AND DIMENSIONS AND NOTIFY THIS OFFICE OF ANY DISCREPANCIES PRIOR TO THE EXECUTION OF THE WORK. WRITTEN DIMENSIONS TAKE PRECEDENCE OVER SCALED DIMENSIONS.

TITLE: IRRIGATION DETAILS AND SPECIFICATIONS

REVISIONS:

DATE: MAY 6, 2024
DRAWN BY: WB
CHECKED BY: CD

JOB NO: 3017

SHEET: IR1.02

Drawing name: C:\Users\arcdu\Dropbox (Personal)\PROJECTS\123017 4791 Federal\consultants\2024 0504 IRR\3017_IRR 2024 0502-FINAL.dwg IR 1.02 May 06, 2024 1:09pm by: arcdu